●M2E-30KBM-KA / M2E-60KBM-KA / M2E-150KBM-KA

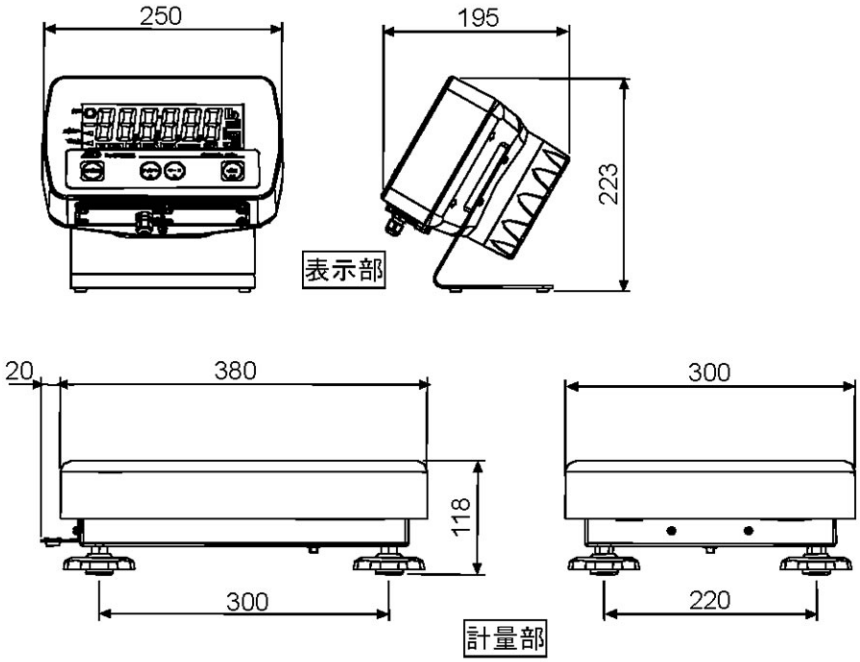


●M2E-60KBL-KA / M2E-150KBL-KA

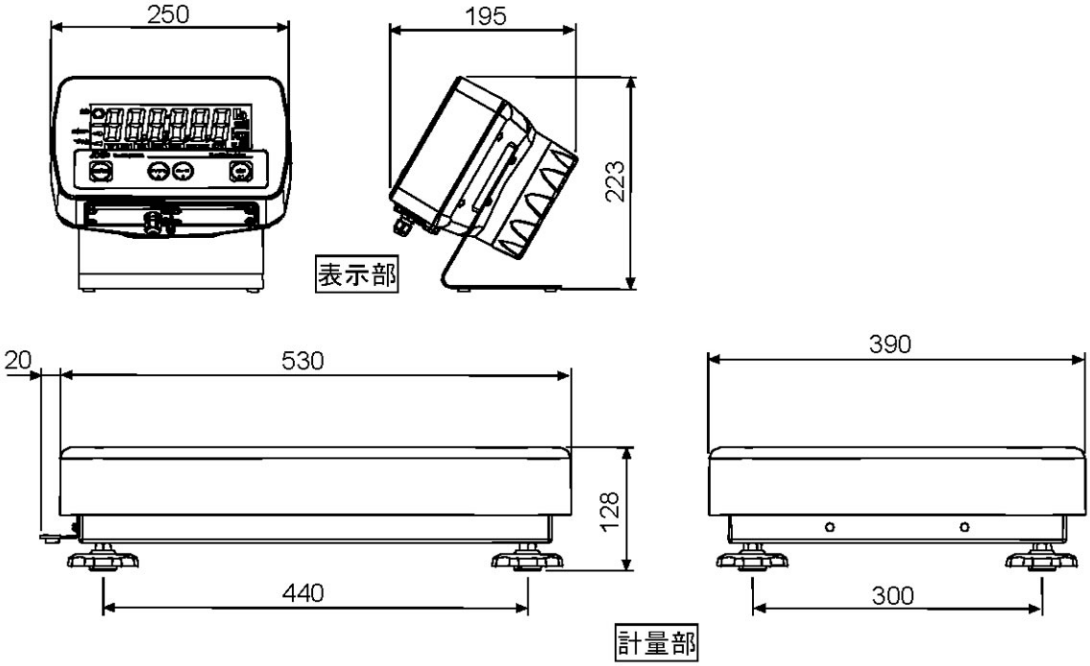


単位：mm